TECHNICAL DATA SHEET

Burlington®
Yesterday's designs TODAY'S TECHNOLOGY

Victorian Regal Basin Large Basin & Regal Pedestal

[B3 1TH] Victorian Basin 610mm 1TH
[P9] Regal Pedestal

Product Specification

Finishes	White
Product Type	Traditional
Material	Vitreous China
Size	w 61cm x d 51cm
Overall Height	90cm
Tap Holes	1,2 or 3

Additional Information

Guarantee

25 YEAR GUARANTEE

See our website for terms and conditions

Compliance / Approvals
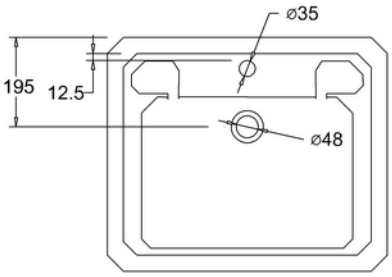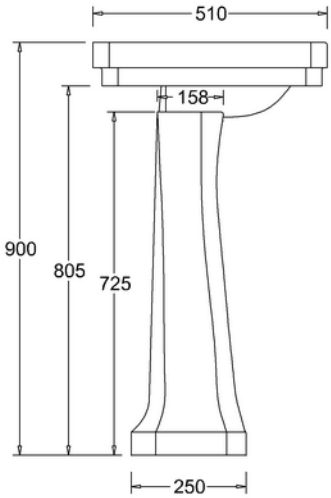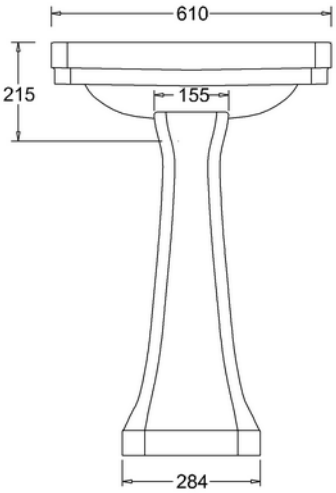
BS EN 14688:2006
Sanitary appliances. Wash basins. Functional requirements and test methods
BS EN 31:1999
Pedestal wash basins. Connecting dimensions